Electrolux PROFESSIONAL

Modular Cooking Range Line 900XP Gas Bratt Pan 100lt with Duomat bottom, auto tilting

ITEM #

MODEL #

NAME #

SIS #

AIA #

391141 (E9BRGJDPFM) 100-lt gas automatic tilting Braising Pan with Duomat cooking surface, thermostatic control

Short Form Specification

Item No.

Suitable for natural gas or LPG. Burners in AISI 441 with flame failure device. Duomat cooking surface for roasting, browning, stewing, preparation of sauces, sautéing, boiling and braising. Can be installed on cantilever systems. Installation on wheels is not available. Includes mechanism to automatically tilt the pan and double-skinned lid in stainless steel. Cooking temperature can be set through thermostat and the energy input through an energy regulator.
Exterior panels of unit in stainless steel with Scotch Brite finish. Right-angled side edges to allow flush-fitting junction between units.

APPROVAL:

Main Features

- Bratt pan ideal for sautéing, poaching, steaming, boiling, stewing and damp cooking.
- Duomat cooking surface allows to perform wet and dry cooking alternatively.
- Double-skin well and lid to reduce heat dispersion.
- Lid is double-lined, insulated in 20/10 Stainless steel.
- Actual cooking temperature setting through adjustable thermostat.
- Energy input controlled by energy regulator.
- Automatic tilting mechanism to facilitate pan emptying.
- Smooth large surfaces, easy access for cleaning.
- The special design of the control knob system guarantees against water infiltration.
- Working temperature can be set from 80 ° C to 300 °C.

Construction

- Cooking surface with Duomat bottom: a 10 mm-thick alloy obtained from the combination of 2 different stainless steels for better thermal stability and corrosion resistance.
- All pan internal surfaces round and polished for better hygiene.
- All exterior panels in Stainless Steel with Scotch Brite finishing.
- Model has right-angled side edges to allow flush fitting joints between units, eliminating gaps and possible dirt traps.
- IPX5 water resistance certification.
- Burners in AISI 441 against corrosion and thanks to a high strenght yield, are resistant to high temperature.
- Usable capacity of the well 85 liters.

Sustainability

- Heat-insulated: limited heat radiation and low energy consumption.

Optional Accessories

- Draught diverter, 150 mm diameter — PNC 206132 ❑
- Matching ring for flue condenser, 150 mm diameter — PNC 206133 ❑
- Flanged feet kit — PNC 206136 ❑

• Frontal kicking strip for concrete installation, 1000mm	PNC 206150	❑
• Frontal kicking strip for concrete installation, 1200mm	PNC 206151	❑
• Frontal kicking strip for concrete installation, 1600mm	PNC 206152	❑
• Frontal kicking strip, 1000mm (not for refr-freezer base)	PNC 206177	❑
• Frontal kicking strip, 1200mm (not for refr-freezer base)	PNC 206178	❑
• Frontal kicking strip, 1600mm (not for refr-freezer base)	PNC 206179	❑
• Pair of side kicking strips (not for refr-freezer base)	PNC 206180	❑
• 2 panels for service duct for single installation	PNC 206181	❑
• 2 panels for service duct for back to back installation	PNC 206202	❑
• Kit 4 feet for concrete installation (not for 900 line free standing grill)	PNC 206210	❑
• Chimney upstand, 1000mm	PNC 206305	❑
• Rear paneling - 1000mm (700/900)	PNC 206375	❑
• Rear paneling - 1200mm (700/900)	PNC 206376	❑
• Chimney grid net, 200mm (700XP/900)	PNC 206399	❑
• Chimney grid net, 400mm (700XP/900)	PNC 206400	❑
• Kit G.25.3 (NI) gas nozzles for 700 and 900 braising pans	PNC 206464	❑
• Trolley with lifting & removable tank	PNC 922403	❑
• Pressure regulator for gas units	PNC 927225	❑

Recommended Detergents

• C41 HI-TEMP RAPID DEGREASER. Suitable for cleaning plates and grills with high temperature surfaces (max 175°C). Pack of 6 1l bottles (includes 1 spray bottle code 0S2331)	PNC 0S2292	❑

The company reserves the right to make modifications to the products without prior notice. All information correct at time of printing.

Modular Cooking Range Line 900XP Gas Bratt Pan 100lt with Duomat bottom, auto tilting

Front

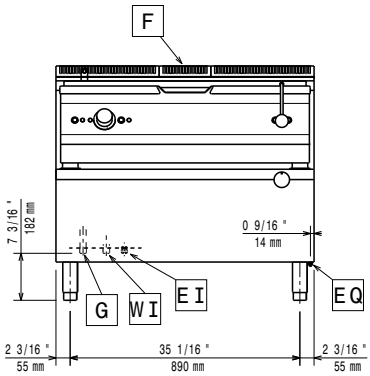

Side

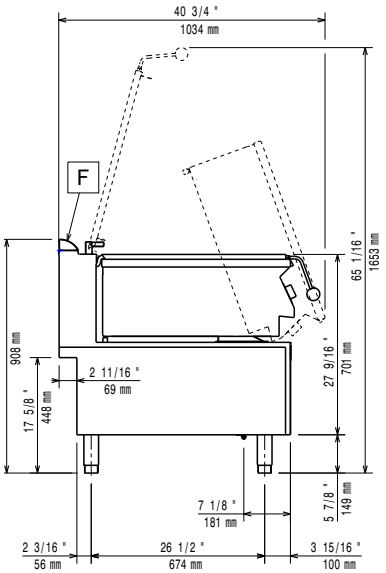

CWI1 = Cold Water inlet 1 (cleaning)
EI = Electrical inlet (power)
G = Gas connection

Top

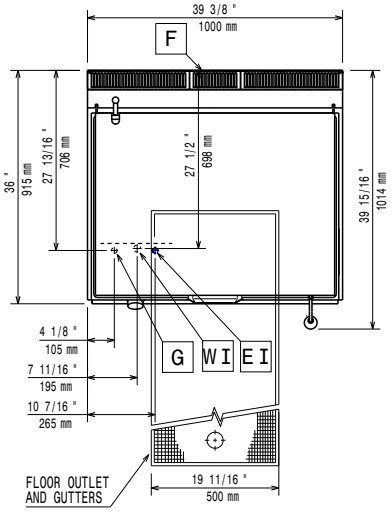

Electric

Supply voltage:	
391141 (E9BRGJDPFM)	220-230 V/1 ph/50 Hz
Total Watts:	0.1 kW

Gas

Gas Power:	27 kW
Standard gas delivery:	Natural Gas G20 (20mbar)
Gas Type Option:	LPG;Natural Gas
Gas Inlet:	1/2"

Key Information:

Cooking Surface Depth:	565 mm
Cooking Surface Width:	880 mm
Cooking Well Height:	130 mm
Well Capacity, Max:	100 lt
Working Temperature MIN:	80 °C
Working Temperature MAX:	300 °C
Net weight:	180 kg
Shipping weight:	188 kg
Shipping height:	1080 mm
Shipping width:	1020 mm
Shipping depth:	1080 mm
Shipping volume:	1.19 m³
Certification group:	N9EBRG

No clearance needed on rear sides of unit if wall is of non combustible type. If wall is combustible, minimum 50 mm wall clearance should be maintained.

The company reserves the right to make modifications to the products without prior notice. All information correct at time of printing.